MANUAL DE INSTRUÇÕES
INSTRUCTIONS MANUAL
MANUAL DE INSTRUCIONES
NOTICE D'INSTRUCTIONS

INTERFER

15.901
CHARRIOT System for wood

www.jnf.pt

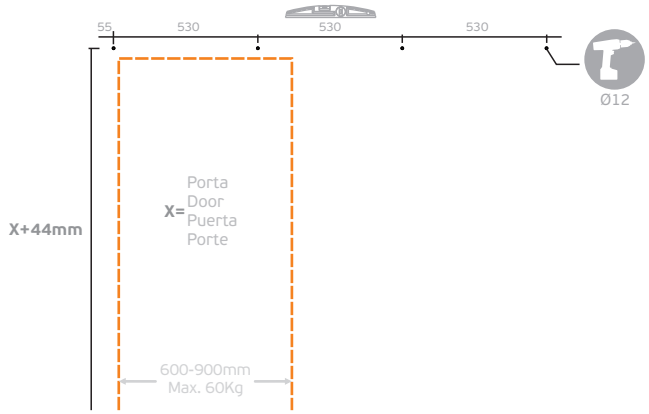

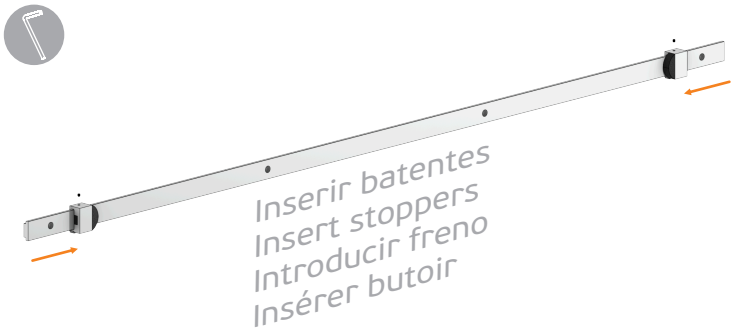

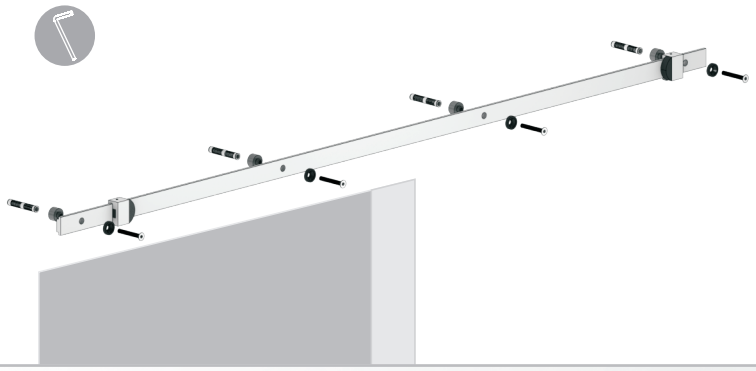

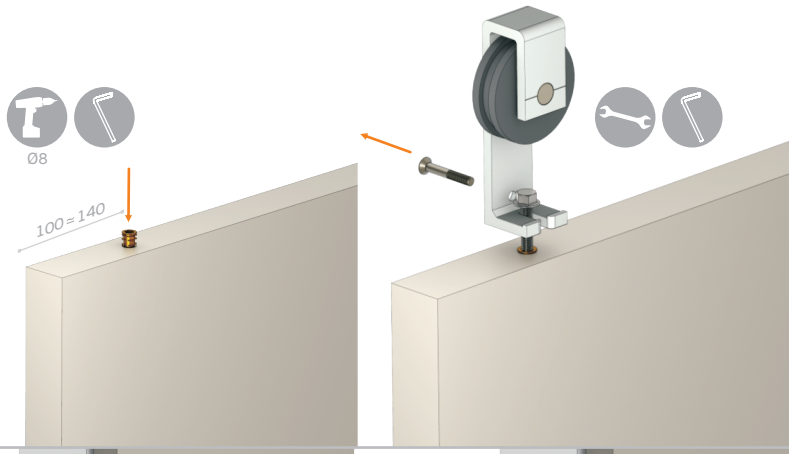

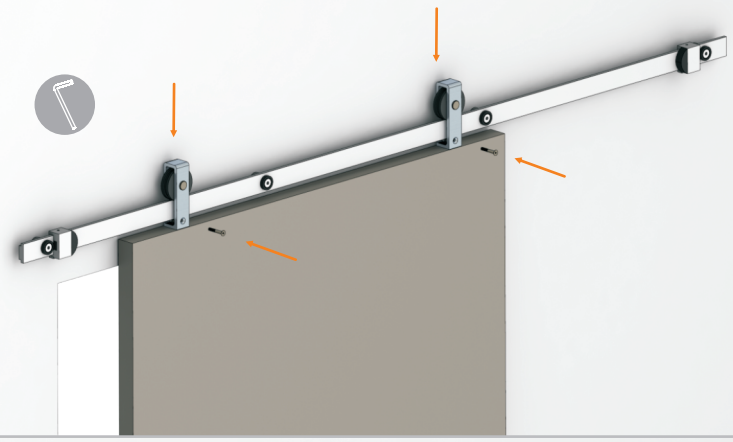

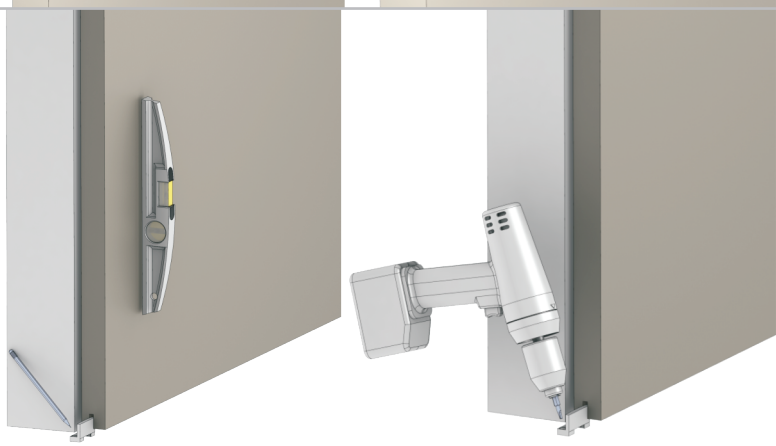

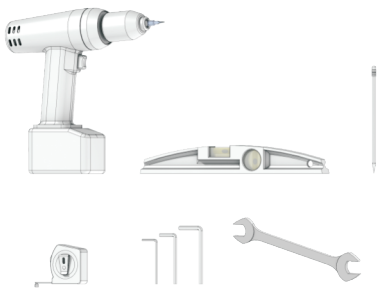

MI087-0